PoWer Plus Series

GeKaMac®

PoWer Plus ARC 320

Manual Instructions

Please Read and Understand This Manual
Before Operating The Welding Machine

www.gedikwelding.com

Attention!

Our Valued Customer,

We kindly request that you obey the warnings mentioned below:

- Definitely have the “Warranty Document” approved when you get the machine.
- Use the machine in a way that is in accordance with the fundamentals that are mentioned in the user’s guide of the machine.
- Refer to the nearest GEDIK WELDING authorized service or the service center of GEDIK WELDING when a problem comes up.

Thank you for prefering one of GeKaMac® products.

AT UYGUNLUK BEYANI

EU DECLARATION OF CONFORMITY

Bu uygunluk beyanı yalnızca imalatçının sorumluluğu altında düzenlenir.

This declaration of conformity is issued under the sole responsibility of the manufacturer.

İstanbul, Turkey, 08.03.2024

İmalatçı / Manufacturer

GEDİK KAYNAK SANAYİ ve TİCARET A.Ş.

Ankara Cad. No.306 Seyhli Pendik ISTANBUL TURKIYE

Ürün / Product	ARC WELDING MACHINE
Marka-Model / Brand- Model	PoWerPlus ARC 320

Yukarıda tanımlanan beyanın nesnesi ilgili uyumlaştırılmış AB mevzuatı ile uyumludur.

The object of the declaration described above, is in conformity with the relevant union harmonisation legislation.

Direktifler / Directives 2014/30/EU & 2014/35/EU & 2009/125/EC

Uyumlaştırılmış standartlar ve uygunluğun deklare edilmesiyle ilişkili diğer referanslar.

References to the relevant harmonised standarts used and references to the other technical specifications in relation to which conformity is declared.

EN IEC 60974-1:2022+A11:2022
EN IEC 60974-10:2021

Bu ekipman, talimatlara uygun kurulduğunda, bakımı yapıldığında ve kullanıldığında belirtilen standartlara uygundur. Makine üzerinde bir değişiklik yapıldığında veya yanlış kullanımda deklarasyon geçersiz olur.

The equipment is in compliance with pertinent legislation when installed, utilized, and maintained in accordance with the enclosed instructions. This declaration will be invalid under any modification or improper use.

İmalatçı Adına imzalayan / Signed for and on behalf of:

Hatice Özel, Equipment Business Unit Director

INDEX

Page

1. Index 2

2. Safety Rules 3

2.1. Electrical Shock 3

2.2. Arc Rays 3

2.3. Gases and Fumes 3

2.4. Welding Sparks 3

2.5. Electricity and Magnetism 4

3. Electromagnetic Compatibility (EMC) 4

4. General Information and Warnings 5

5. Advantages and General Properties of PoWer Plus+ARC 320 6

6. Working Principle of PoWer Plus+ARC 320 7

7. Technical Information 8

8. Duty Cycle and Over Heat 8

9. Connection to the Mains Supply 9

10. Layout for Front & Rear Panel 10

11. Hot Start Adjustment 11

12. Arc Force Adjustment 11

13. Welding Operation 12

14. Welding Parameters 13

15. Machine Maintenance 13

16. Troubleshooting 14

17. Electrical Principle Drawing 16

18. Warranty Conditions 17

19. Warranty Document 18

2. SAFETY RULES

Protect yourself and others against possible serious injury or death risks. Keep children away. People who have pacemakers in their bodies should consult their doctors before operating the welding machine. Be careful when you are doing operations with your hands on the pieces. Use proper equipment that are necessarry to protect yourself from burns that can be caused by excessive heating of the piece during welding and / or cutting operation. Be sure that all set up, maintenance and repair related operations are performed only by qualified people.

2.1. ELECTRICAL SHOCK

Electrode and the piece that is being worked on or ground circuits are active in terms of electricity while the welding machine is on. Don't touch these active parts with bare hands or wet clothing. Wear dry gloves that have no holes to insulate your hands.

2.2. ARC RAYS

Use a protective mask with a proper filter to protect your eyes from the sparks and the rays of the arc while welding or watching such an actitivity. The head mask and the filtered glasses must meet the ANSI Z87.I standards.

2.3. GASES AND FUMES

Fumes and gases that are harmful to health can form during the welding operation.

Do not inhale these gases or fumes. Keep your head out of the fumes while welding. Provide sufficient ventilation in the arc and / or use fume suction machines to keep fumes and gases out of the breathing area.

2.4. WELDING SPARKS

Put away elements that are fire hazards from the welding area. If this is not possible, cover these hazards to prevent welding sparks from starting a fire. Do not forget that welding sparks and hot materials coming from welding can go on to neighboring areas easily through small cracks and openings. Don't do welding near hydrolic lines. Always keep a fire extinguisher on hand.

2.5. ELECTRIC AND MAGNETISM

Electric flow that passes through a conductor causes Electric and Magnetic Fields (EMF) to be formed. Welding current creates EMF around welding cables and welding machines.

— EMF can ruin the operation of some pacemakers. For this reason, welders who have pacamakers in their bodies should consult their doctors before welding.

— Being exposed to EMF during welding, can cause other unknown health problems.

— Getting exposed to EMF will be minimized by paying attention to the following instructions:

- Guide electrode and chassis cables together.
- Never wrap electrode and chassis cables around your body.
- Do not place your body between the electrode and chassis cables.
- Connect the chassis cable as close to the piece that is being worked on as possible.
- Stay as far away as you can from the power units.

3. ELECTROMAGNETIC COMPATIBILITY (EMC)

This machine has been designed in accordance with all related regulations and norms. Additionally, it can still generate electromagnetic forces that affect other systems such as communications (telephone, radio, television). These affects can cause security problems in the exposed systems. Read carefully and understand this section in order to reduce or get rid of the affects that can be created by this machine.

This machine has been designed to be operated in the industry area. If it is operated in private places (house etc.), it will become necessary to take special precautionary measures in order to prevent possible electromagnetic affects. It is necessary for the user to set up and operate these machines just like the way it is described in the handbook. If an electromagnetic affect is perceived due to the operation of these machines, the user should take corrective measures in order to get rid of these affects. If necessary, the user should contact GEDIK WELDING IND. COM. LTD. CO. No changes should be made in the machine without getting written approval from GEDIK WELDING IND. COM. LTD. CO.

The control of the work area should be made in terms of tools that can work improperly due to the electromagnetic affects before the machine is assembled.

- Inlet and outlet cables, telephone cables and control cables that are found in the work area of the machine.
- Radio and/or television transmitters and receivers,

3. ELECTROMAGNETIC COMPATIBILITY (EMC) (Continuing)

- Computer or computer controlled tools,
- Safety and control equipment for industrial operations,
- Calibration and measurement appliances,
- Medical appliances such as heart rhtyme appliance and hearing aids,

Control the electromagnetic immunity of the equipments that operate near the work area. The user should be certain that all the equipments that are in the work place are compatible. Otherwise, it can necessitate additional protective measures.

Ideal dimensions of the work place are determined by the construction of the area and other factors that are found there. Take the warnings below into consideration in order to decrease the affects of the electromagnetic waves that the machine generates:

* Make the connection of the machine with the network electricity in the way it is stated in the user's guide. If an electromagnetic interaction comes into being, such preventive measures as filtring the main electrical inlet may need to be taken.

* Outlet cables should be as short as possible and should be kept together.

4. GENERAL INFORMATION AND WARNINGS

Do not set up, operate or repair before reading the user's guide and the security measures that are found in it. Hide this user's guide and always have it on hand.

- Cut off the electrical connection between the welding machine and the network when the work is finished or when you are going to take a long break.
- Do not make any changes in the welding machine. This operation can cause the machine to lose its properties and a change in technical data.
- It is forbidden to do adaptation on the welding machine. Doing adaptation does not only cause the loss of warranty rights, but also can jeopardize the operational safety of the machine and can create the risk of electrocution for the users.
- A damage in the welding machine due to a mistake of the user will cause the loss of warranty rights.
- Acceptable environmental temperature range during work is between -10 °C and +40 °C.
- Acceptable relative humidity rate is 95% at 20 °C.
- Manufacturing company reserves the right to change the technical properties without prior notice.

5. ADVANTAGES AND GENERAL PROPERTIES OF PoWer Plus+ARC 320

PoWer Plus+MMA 320（discrete） welder is a MMA arc welder which adopts the latest pulse width modulation (PWM) technology and the insulated gate bipolar transistor (IGBT) power module. It can change work frequency to medium frequency so as to replace the traditional hulking work frequency transformer with the cabinet medium frequency transformer. Thus, it is characterized with portable, small size, light weight, low consumption and etc.

PoWer Plus+MMA 320（discrete） has excellent performance: constant current output makes welding arc more stable; fast dynamic response speed reduces the impact from the arc length fluctuation to the current; accurate stepless current adjustment and pre-setting function. There are also some automatic protection functions for under voltage, over current, over heat, etc. inside the welder, when the problems listed before occurred, the alarm light on the front panel is on and at the same time the output current will be cut off. It can self-protect and prolong the using life and greatly improved the reliability and practicability of the welder.

PoWer Plus+MMA 320（discrete）, welding current, arc force and hot start can be adjusted by the adjustment knob, which can satisfy with several kinds of welding technologies. They can also realize high quality welding especially for using basic electrode, acid electrode and cellulose electrode. When using cellulose electrode, they can also realize downward welding for butt joint in all position.

PoWer Plus+MMA 320（discrete） is widely used in Petroleum, chemical, mechanical, shipbuilding, architecture, boiler, pressure container, war industry and installation and so on.

MMA——Manual Metal Arc welding;

PWM——Pulse Width Modulation;

IGBT——Insulated Gate Bipolar Transistor;

6. WORKING PRINCIPLE OF PoWer Plus+ARC 320

The working principle of TP- series welding machines is shown as the following figure. Three phases work frequency AC 380V (50 Hz) is rectified into DC, then is converted to medium frequency AC by inverter device (IGBT), after reducing voltage by medium transformer (the main transformer) and rectifying by medium frequency rectifier (fast recovery diode), and is outputted by inductance filtering. The circuit adopts current feedback control technology to insure current output stably. Meanwhile, the welding current parameter can be adjusted continuously and steplessly to meet with the requirements of welding craft.

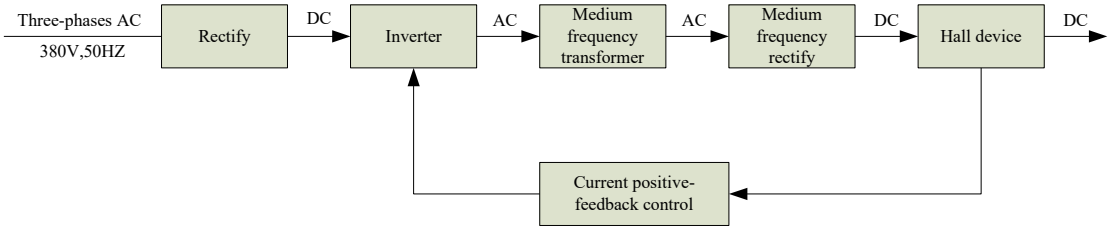

$I_2 \leq 600A$, $U_2 = 20 + 0.04\, I_2$ (V)

$I_2 > 600A$, $U_2 = 44V$

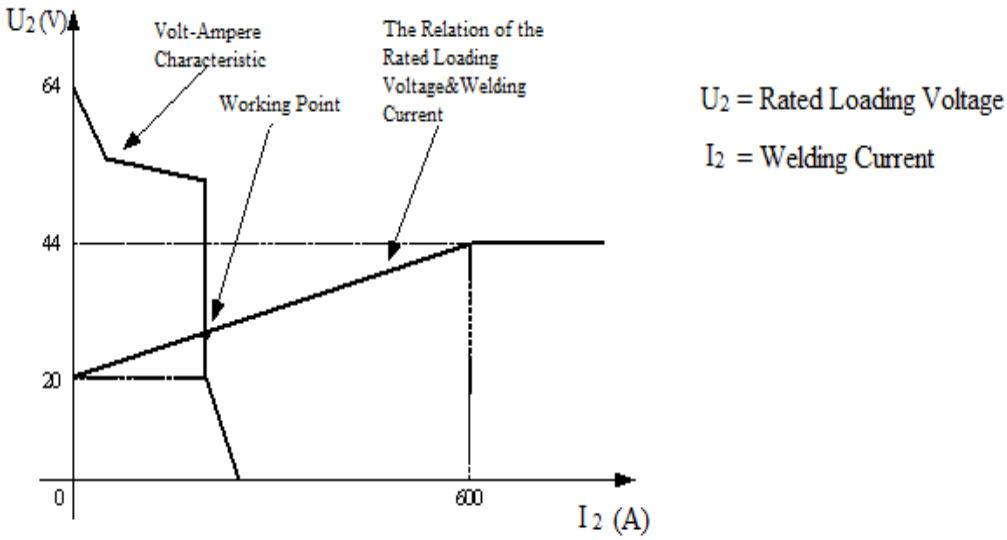

7. TECHNICAL INFORMATION

Model Parameters	PoWer Plus+ARC 320
Power source	Three-phase, 380V±10%, 50Hz
Rated input current（A）	23
Rated input power（KW））	11,5
Power factor	0,7
Welding current range（A）	20-320
Max no load voltage (V)	55
Efficiency	≥90
Duty cycle（40 ,10mins）	320A 60%
	250A 100%
Protection class	IP23
Insulation class	H
Dimensions of Machine（L×W×H） （mm）	485×240×445

8. DUTY CYCLE AND OVER HEAT

The letter “X” stands for duty cycle, which is defined as the proportion of the time that a machine can work continuously within a certain time (10 minutes). The rated duty cycle means the proportion of the time that a machine can work continuously within 10 minutes when it outputs the rated welding current.

If the welder is over-heat, the IGBT over-heat protection unit inside it will output an instruction to cut output welding current, and brighten the over-heat pilot lamp on the front panel. At this time, the machine should be relaxed for 15 minutes to cool the fan. When operating the machine again, the welding output current or the duty cycle should be reduced.

9. CONNECTION TO THE MAINS SUPPLY

PoWer Plus+ARC 320, MMA- series（discrete） arc welder power supply input connection as the right illustration. Separately connect the 3 pcs live wire of the brown, black & blue color to the power switch on the rear panel of welder (no phase requirement), connect the earth cable of yellow & green color to the power cable input of welder.

When the power supply voltage is over the safe work voltage, there are over voltage and under voltage protection inside the welder, the alarm light will on, at the same time, the current output will be cut off.

If the power supply voltage continually goes beyond the safe work voltage range, it will shorten the welder life-span. The below measures can be used:

- Change the power supply input net. Such as, connect the welder with the stable power supply voltage of distributor;
- Induce the machines using power supply in the same time;
- Set the voltage stabilization device in the front of power cable input.

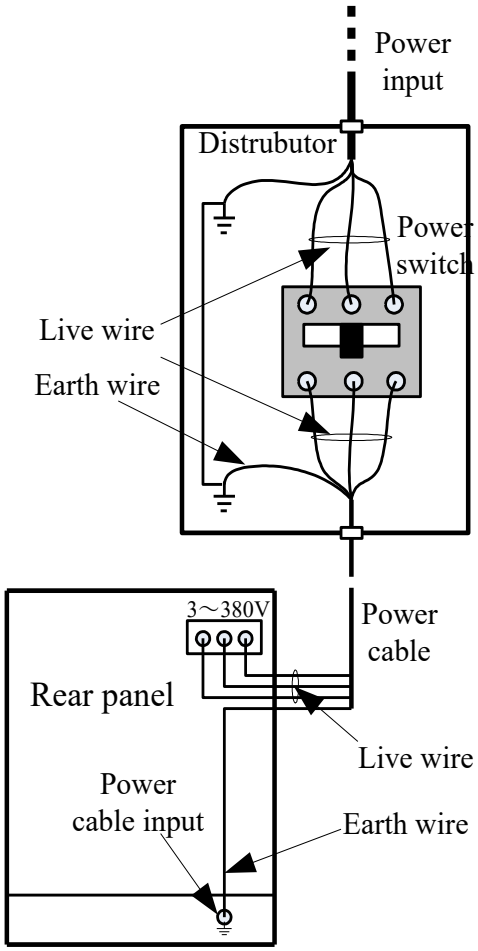

10. LAYOUT FOR FRONT & REAR PANEL

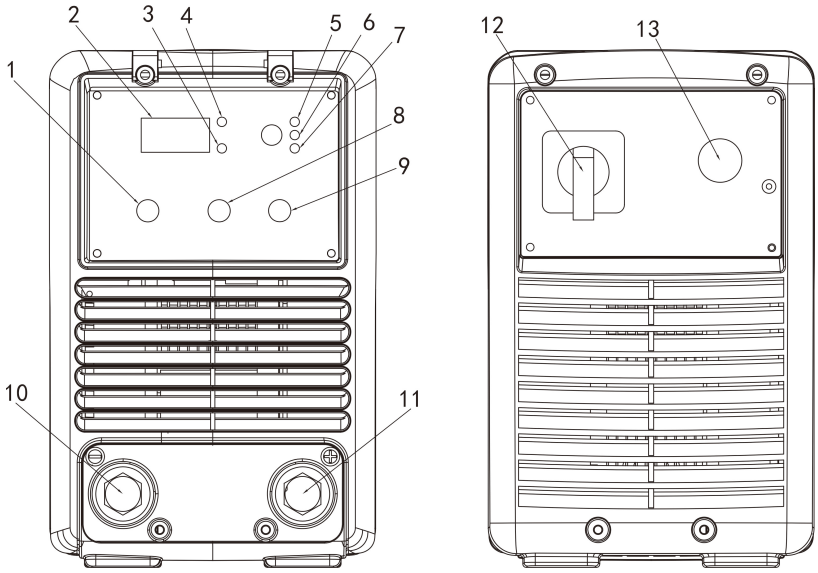

1. Welding current

2. Current display

3. Alarm pilot lamp: This pilot lamp indicates when lit that the protection of the

4. Power pilot lamp: This pilot lamp when lit indicates that the machine is on

5. MMA

6. MMA VRD

7. LIFT TIG

8. Hot Start adjustment

9. Arc force adjustment

10. Output joint: Positive polarity output

11. Output joint: Negative polarity output

12. Main switch

13. Mains cable

11. HOT START ADJUSTMENT

The number ”0~10” on the potentiometer is not actual arc force, but a proportion concept.

More welding current pre-set value, more hot start current addition. Clockwise turning the hot start knob, the hot start added current lasts long time, the striking is more easy.

There are no actual added current value around the knob. Hot start adjustment is chosen to be based on the electrode diameter and workpiece thickness.

Operation remark：

- It is available in the striking arc only.
- The interval time for hot start is 3 sec.

12. ARC FORCE ADJUSTMENT

Refer to volt-ampere characteristic graph（under 20V graph part）,when the MMA-400 load voltage is under 20V, there is arc force output. The arc length is shorter, the arc force is bigger. It can prevent sticking and increase the depth of penetration.

The number “0-10”on the potentiometer is not actual arc force, but a proportion concept.

When the potentiometer is in the “0” position (the minimum of the arc force), the operation of arc force is not in use.

Operation remark

- In the mark of 0 (soft arc), application range: acid electrode; in the middle & highcurrent, using basic electrode.
- In the mark of 10 (hard arc), application range: welding in the low current range（vertical up welding,surfacing welding,overhead welding, etc.）

Increase the arc force:

- Easy to striking arc
- Increase spatter
- Good root meltability

In welding thin plate, increase the dangers of penetration.

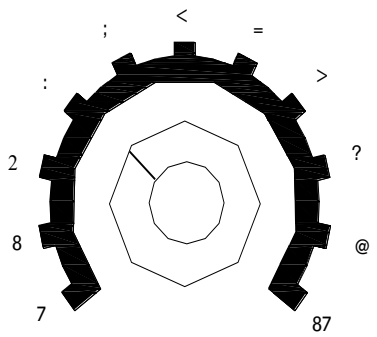

Adjustment of hot start

13. WELDING OPERATION

Knocking Arc: Take the electrode upright to touch the workpiece, after forming short circuit, quickly lift up about 2~4 mm, and arc will be ignited. This method is difficult to master. But in the welding for the brittle or hard steel, it is better to use knocking way.

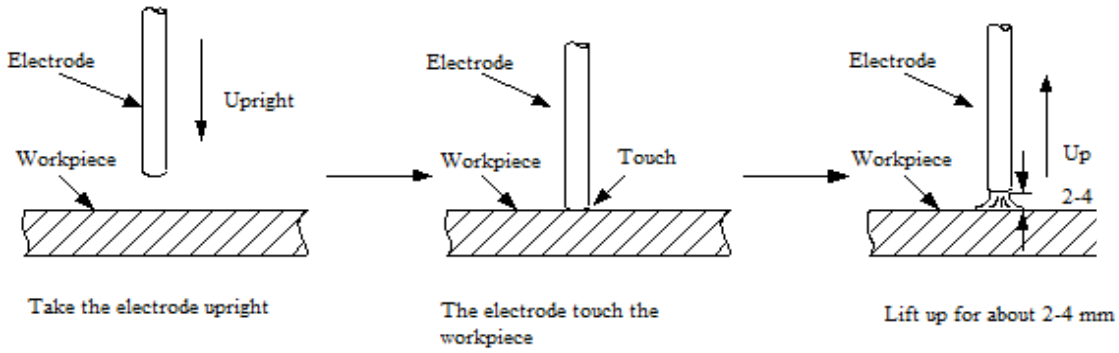

Lifting Arc: take the electrode to scrape the workpiece for striking arc. But it may cause the arc scratch, so must to lift arc in the groove.

Manipulation of Electrode

In MMA welding, there are three motions to being matched in the end of electrode: the electrode moving to the molten pool along axes; the electrode swing right and left; the electrode moving along welding way.

The operator can choose the manipulation of electrode based on

welding joint shape, welding position, electrode spec, welding

current and operation skill, etc.

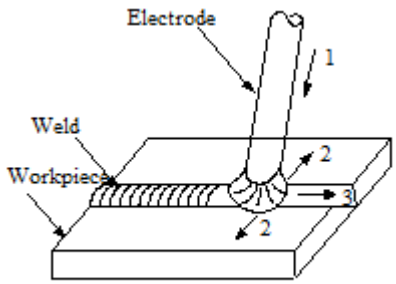

14. WELDING PARAMETERS

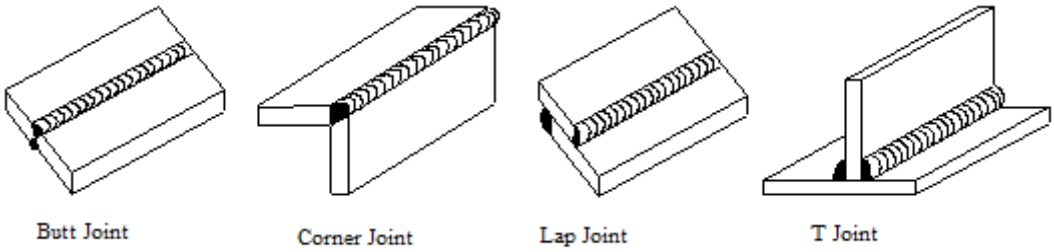

15. MACHINE MAINTENANCE

In order to guarantee that arc welding machine works high-efficiently and in safety, it must be maintained regularly. Let customers understand the maintenance methods and means of arc welding machine more , enable customers to carry on simple examination and safeguarding by oneself, try one's best to reduce the fault rate and repair times of arc welding machine, so as to lengthen service life of arc welding machine .Maintenance items in detail are in the following table.

● **Warning: For safety while maintaining the machine, please shut off the supply power and wait for 3 minutes, until capacity voltage already drops to safe voltage 36V.**

Date	Maintenance item
Daily examination	Observe that whether panel knob and switch in the front and at the back of arc welding machine are flexible and put correctly in place. If the knob has not been put correctly in place, please correct; If you can't correct or fix the knob , please replace immediately;
	If the switch is not flexible or it can't be put correctly in place, please replace immediately; Please get in touch with maintenance service department if there are no accessories.
	After turn-on power, watch/listen to that whether the arc welding machine has shaking, whistle calling or peculiar smell. If there is one of the above problems, find out the reason to get rid of; if you can't find out the reason, Please contact local this area agent or the branch company.
	Observe that whether the display value of LED is intact. If the display number is not intact, please replace the damaged LED. If it still doesn't work, please maintain or replace the display PCB.
	Observe that whether the min/max value on LED accords with the set value. If there is any difference and it has affected the normal welding craft, please adjust it.
	Check up that Whether fan is damaged and is normal to rotate or control. If the fan is damaged, please change immediately. If the fan does not rotate after the arc welding machine is overheated , observe that whether there is something blocked in the blade, if it is blocked, please get rid of ; If the fan does not rotate after getting rid of the above problems, you can poke the blade by the rotation direction of fan. If the fan rotates normally, the start capacity should be replaced ; If not, change the fan.
	Observe that whether the fast connector is loose or overheated. if the arc welding machine has the above problems, it should be fastened or changed.
	Observe that Whether the current output cable is damaged. If it is damaged, it should be wrapped up, insulated or changed.

15. MACHINE MAINTENANCE (Continuing)

Date	Maintenance item
Monthly examination	Using the dry compressed air to clear the inside of arc welding machine. Especially for clearing up the dusts on radiator, main voltage transformer, inductance, IGBT module, the fast recover diode and PCB, etc.
	Check up the bolt in arc welding machine, if it is loose, please screw down it. If it is skid, please replace. If it is rusty, please erase rust on bolt to ensure it works well.
Quarter- yearly examination	Whether the actual current accords with the displaying value. If they does not accord, they should be regulated. The actual current value can be measured by the adjusted plier-type ampere meter.
Yearly examination	Measure the insulating impedance among the main circuit, PCB and case, if it below 1MΩ, insulation is thought to be damaged and need to change , and need to change or strengthen insulation.

16. TROUBLESHOOTING

- Before arc welding machines are dispatched from the factory, they have already been debugged accurately.

So forbid anyone who is not authorized by our company to do any change to the equipment!

- Maintenance course must be operated carefully. If any wire becomes flexible or is misplaced, it maybe potential danger to user!
- Only professional maintenance personal who is authorized by our company could overhaul the machine!
- Guarantee to shut off the arc welding machine's power before turn on the outline of the equipment!
- If there is any problem and has no the authorized professional maintenance personal of our company, please contact local our company agent or the branch company!

S/N	Troubles	Reasons	Solutions
1	Welding seam doesn't meet the requirement	The groove angle is not proper The root face and assembly gap is not equal Welding technics parameters are unreasonable The welder's operation skill is lower	Choosing the proper groove angle & assembly gap, improve the assembly quality Choosing the proper welding parameters Improve the operation skill of welders
2	Undercut	Over current Arc length is too long	Choosing the proper welding current & speed The arc can't be drawn too long
S/N	**Troubles**	**Reasons**	**Solutions**
2	Undercut	The electrode angle is wrong Manipulation of electrode is not proper	The electrode angle should be proper Manipulation of electrode should be correct
3	Incomplete penetration	The groove angle or gap is too small, the root face is too big Welding parameters are not suitable, or the assembly is not good The welder's operation skill is lower	Correctly to choose and process the groove size Correctly to assemble and ensure clearance Choosing the suitable welding current & speed Improve the operation skill of welders
4	Cold crack	Three reasons will cause cold crack: The structure turned from the marten site The residual stress caused by big restraint intensity The residual hydrogen in welding gap.	Adopt low hydrogen type basic electrode. Bake under the instruction before use. Remove the feculence before use, reduce the percentage of hydrogen Adopt appropriate parameters and heat input After welding, do dehydrogenation at once.

5	Overlap	The temperature of molten pool is too high The liquid metal concretes slowly	Choosing parameters based on the welding different position Strictly to control the molten hole size
6	Crater	The crater time lasts too short Over current in the welding of thin plate	In the crater, electrode should be stayed for a short time or round to manipulate electrode after the molten pool is filled in by metal, take to the side for crater
7	Blowhole	There are some dust like oil, rust or water on the work piece surface and groove The coating of electrode is damped& is not drying Under current or over speed in the welding The arc is too long or lean burning, the molten pool protection is not good	Clear out the dust around groove for about 20～30mm Strictly to dry the electrode according to manual Correctly to choose parameters and to operate Using the short arc operation
	Hot crack	In the process of solidification, the inter crystal segregation is seriously caused. At the same time, with the effect of welding stress, the hot crack is formed.	Strictly control the percentage of S and P in welding material. Adjust the structure of welding material. Adopt the basic electrode.

17. ELECTRICAL PRINCIBLE DRAWING

19. PoWer Plus ARC 320 DEVRE ŞEMASI

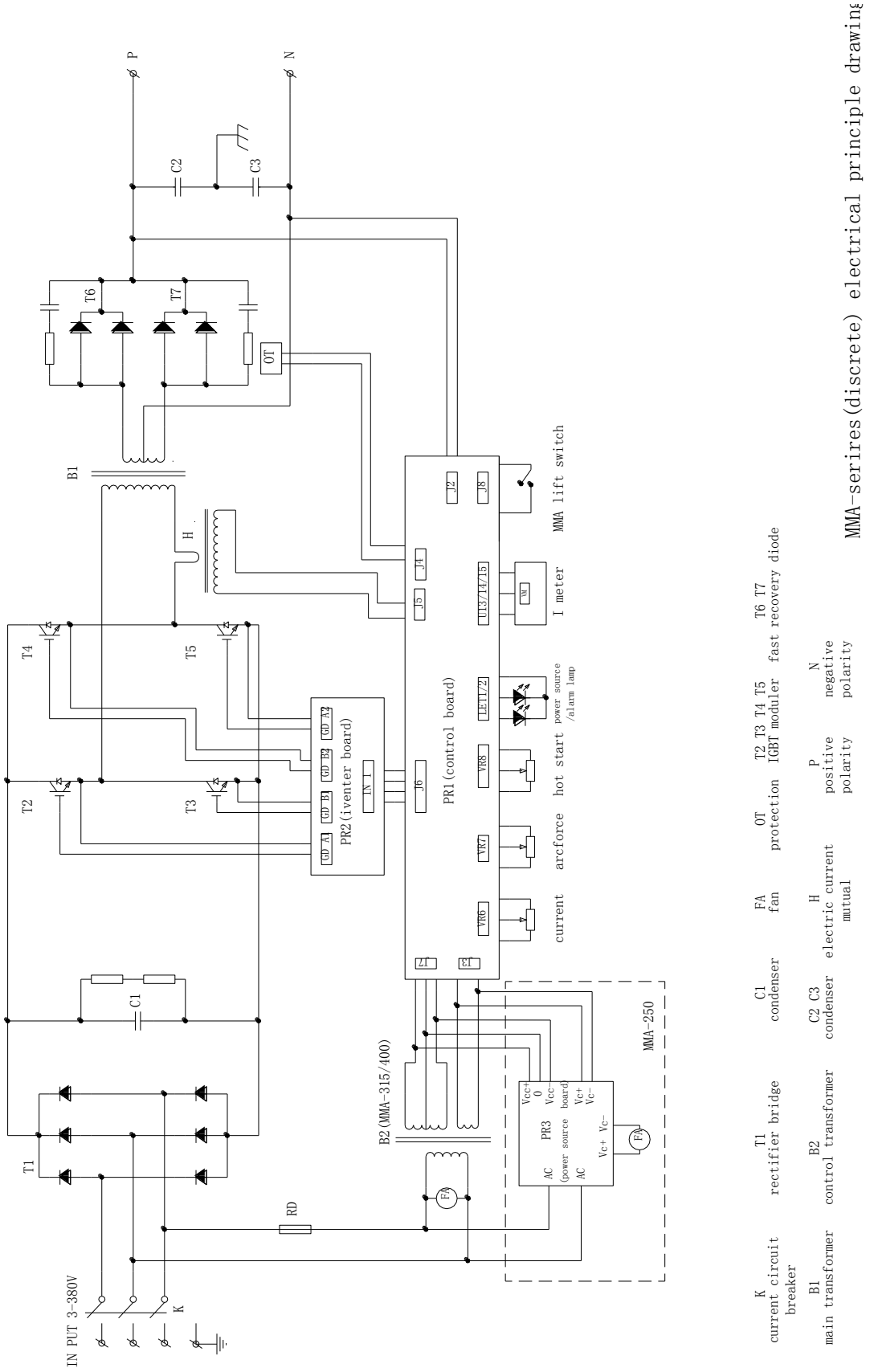

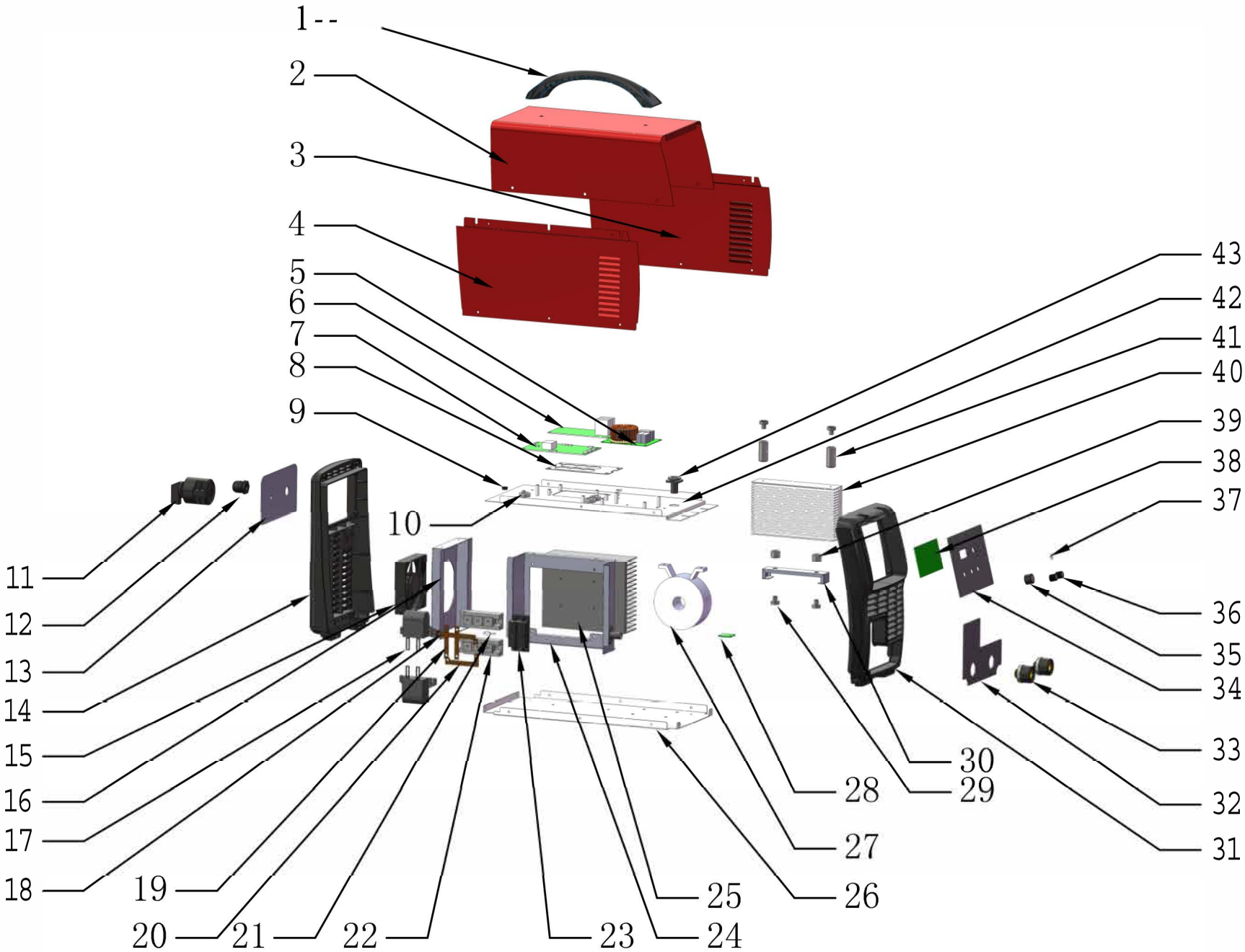
1--
2
3
4
5
6
7
8
9
10
11
12
13
14
15
16
17
18
19
20
21
22
23
24
25
26
27
28
29
30
31
32
33
34
35
36
37
38
39
40
41
42
43

S.021RM.358-TR POWER PLUS ARC 320					
No	Item code	SAP KODU	Description	Unit	QTY
1	8.253RM.003-B	6064200067	handle	PCS	1
2	8.301RM.358-A	*	Cover	PCS	1
3	8.051RM.358	*	Right side cover	PCS	1
4	8.050RM.358	*	Left side cover	PCS	1
5	W.496RM.286-D	6064000072	Wide voltage EMC board	PCS	1
6	W.496RM.409-C	6064000131	Capacitor board	PCS	1
7	W.496RM.374-C	6064000076	Power Driver Board	PCS	1
8	8.713RM.139	*	Insulation board	PCS	1
9	7.505.512	*	Buckle type protective wire sleeve	PCS	1
10	7.505.110	*	Double sided protective coil	PCS	3
11	7.232.033-C	6064100125	Rotating switch	PCS	1
12	7.155.003	*	Cable joints	PCS	1
13	8.307RM.147-D	*	Rear panel sealing plate	PCS	1
14	8.068RM.921-BK	6064200098	rear panel	PCS	1
15	7.720.056	6064100060	Fan	PCS	1
16	8.122RM.433	*	Fan installation plate	PCS	1
17	2120I040010	*	Metallized thin film capacitors	PCS	2
18	8.511RM.016	*	connecting copper bars (II)	PCS	1
19	8.511RM.015	*	connecting copper bars (1)	PCS	2
20	8.511RM.017	*	connecting copper bars (III)	PCS	1
21	7.231.088-B	*	Thermistor	PCS	1
22	7.425.106-E	6064100058	IGBT module	PCS	2
23	7.411.115-B	6064100062	Three Phase Bridge	PCS	1
24	8.123RM.318-C	*	IGBT module sealing box	PCS	1
25	8.422RM.289	*	Radiator (1)	PCS	1
26	8.055RM.358-B	*	Base board	PCS	1
27	L.185RM.358-J	6064100420	transformer	PCS	1
28	5.496RM.069	6064000094	Absorber PCB	PCS	1
29	7.662.801	*	Insulating cap	PCS	4
30	8.123RM.303	*	MUR radiator support plate	PCS	1
31	8.069RM.971	6064200046	front panel	PCS	1
32	8.123RM.433-B	*	Front output board	PCS	1
33	7.152.312-A	*	Euro CONNECTOR	PCS	2
34	8.306RM.358	*	Front panel sealing plate	PCS	1
35	7.458.430	*	knob	PCS	1
36	7.458.420	*	knob	PCS	2
37	7.224.300-B1	*	Key shaped switch cap	PCS	1
38	WP.496RM.388-G-1	6064000083	front PCB	PCS	1
39	8.712.002	*	insulating sleeve	PCS	2
40	W.423RM.087	6064100428	MUR assembly	PCS	1
41	8.712.004	*	insulating sleeve	PCS	2
42	8.062RM.358-A	*	Circuit board installation board	PCS	1

43	7.505.122	*	Protective coil	PCS	2
40-1	2121A000010	*	Copper aluminum composite sheet	PCS	1
40-2	7.108.052	*	Solder pad	PCS	8
40-3	7.401.079	6064100057	Fast recovery diode	PCS	8
40-4	8.423RM.065	*	MUR radiator	PCS	1
40-5	8.713RM.039	6064200078	Insulation sleeve	PCS	8
40-6	8.713RM.042	6064100088	Insulation sleeve	PCS	2
40-7	8.713RM.046	*	Insulating cap	PCS	2
40-8	8.921.102-B	*	6 # Hexagonal gasket (II)	PCS	4
40-9	W.496RM.087-D	6064000092	MUR PCB board	PCS	1

2. The whole merchandise including all its parts are covered by the warranty of our company.

3. If the merchandise breaks down within the length of the warranty, the time spent in the repair shop will be added to the length of the warranty. The length of repair of the merchandise is at the maximum 20 working days. This period of time starts on the date that the merchandise was delivered at one of the following locations: A service station or the seller of the merchandise or dealer or agency or representation office or importer or manufacturer, in this order if there are no service stations.

4. If the merchandise breaks down either due to material and workmanship or assembly lines within the length of the Warranty, it will be repaired without demanding any money under the name of expenditure of workmanship, the cost of the changed piece or under any other name.

5. Replacement operation will be done without charge in cases where the merchandise repeats the same fault more than twice or different faults come up more than four times within the length of the warranty, the length of the repair exceeds maximum necessary time and the determination of the unrepairability of the merchandise by a report that is prepared either by a service station or the seller or a dealer or an agency or a representation office or the importer or the manufacturer, in this order, if there are no service stations.

6. Faults that are results of misuse according to the user's guide of the merchandise are not covered by the warranty.

7. Ministry of Science Industry and Technology, The Protection of the Consumer and Competition General Directorate can be refered to whenever a problem concerning the warranty document comes up.

8. Earth clamp and electrode holder kits are not under warranty.

GeKaMac®

Gedik Welding Machines

Warranty Document

MACHINE INFORMATION

Brand : GeKaMac®

Model : ……

Serial Number : ……

CUSTOMER INFORMATION

Company Name : ……

Authorized Person : ……

Telephone : ……

Company Address : ……

City/Country…… ……

E-Mail :…… @……

Signature /Cachet :

SERVICE INFORMATION

Authorized Service : ……

Service Staff : ……

Installation Date : ……/……/……

Warranty Starting Date : ……

Warranty Expiration Date : ……

Signature /Cachet :

GeKaMac®

Gedik Welding Machines

Warranty Document

MACHINE INFORMATION

Brand : GeKaMac®

Model : ……

Serial Number : ……

CUSTOMER INFORMATION

Company Name : ……

Authorized Person : ……

Telephone : ……

Company Address : ……

City/Country…… ……

E-Mail :…… @……

Signature /Cachet :

SERVICE INFORMATION

Authorized Service : ……

Service Staff : ……

Installation Date : ……/……/……

Warranty Starting Date : ……

Warranty Expiration Date : ……

Signature /Cachet :

Manufacturer:
Company Name: Shanghai HI-ZONE Welding Equipment Manufacture Co.,Ltd.
Company adress: A-2nd Floor, No.99-3, Shenmei Road, Zhoupu, Pudong, Shanghai 201318 China
Contact Details: T: +86 21 31295500 | F: +86 21 51919711

Manufacturer:
Company Name: Shanghai HI-ZONE Welding Equipment Manufacture Co.,Ltd.
Company address: A-2nd Floor, No.99-3, Shenmei Road, Zhoupu, Pudong, Shanghai 201318 China
Contact Details: T: +86 21 31295500 | F: +86 21 51919711

Importer:
Gedik Kaynak San ve Tic A.Ş
Company Address: Ankara Cad No: 306 Seyhli 34906 Pendik, Istanbul
TURKEY
Contact Details: +90 216 3785000

PoWer Plus Series

GeKaMac®

Gedik Welding Ankara Caddesi
No : 306 Şeyhli 34906 Pendik, İstanbul / Turkey
T +90 216 378 50 00 F +90 216 378 20 44
gedik@gedik.com.tr